LOUVER SCHEDULE					FILTER AND FRAME SCHEDULE						
ITEM NO.	QTY.	LOUVER SIZE W X H	SECTION QTY.	SECTION SIZE W X H	FILTER QTY.	FILTER SIZE A	B	C	D	E	F

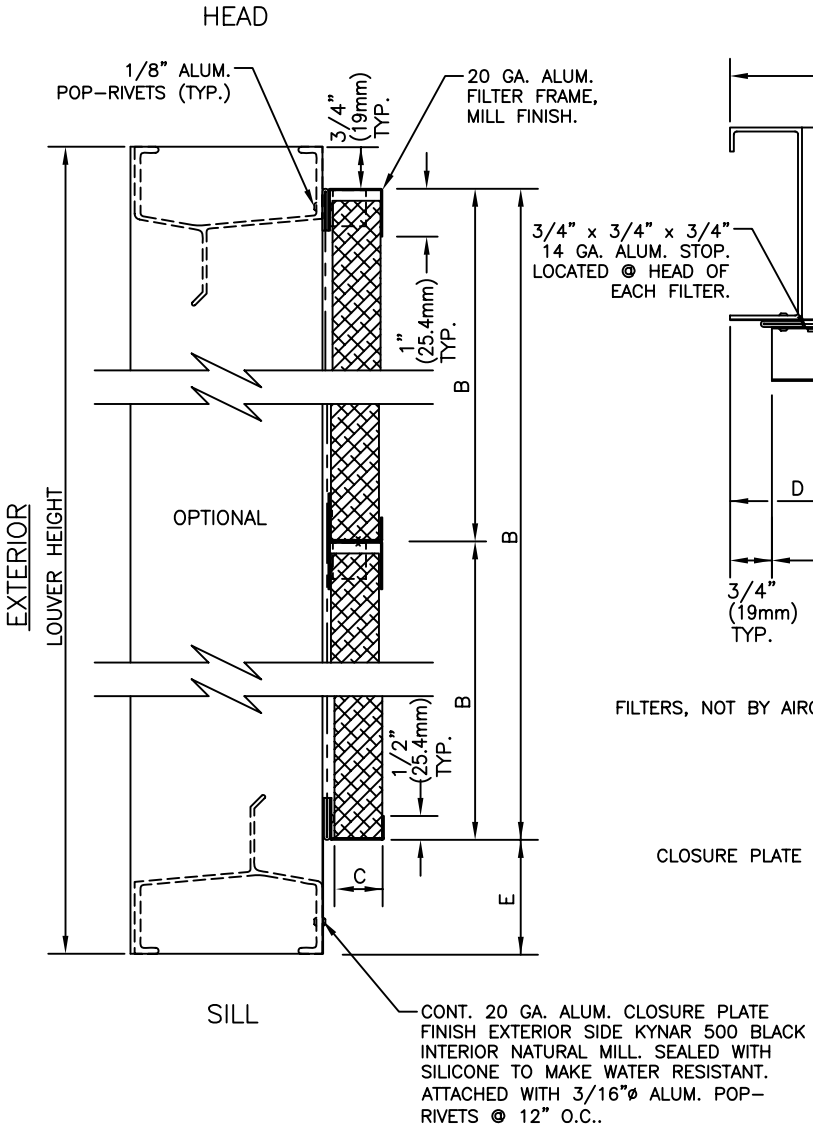

SECTION VIEW

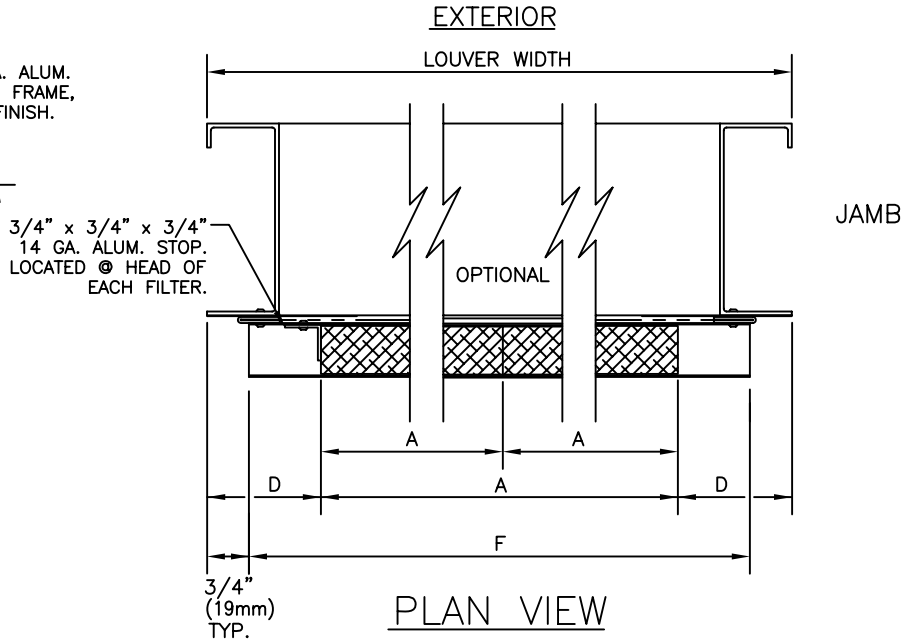

PLAN VIEW

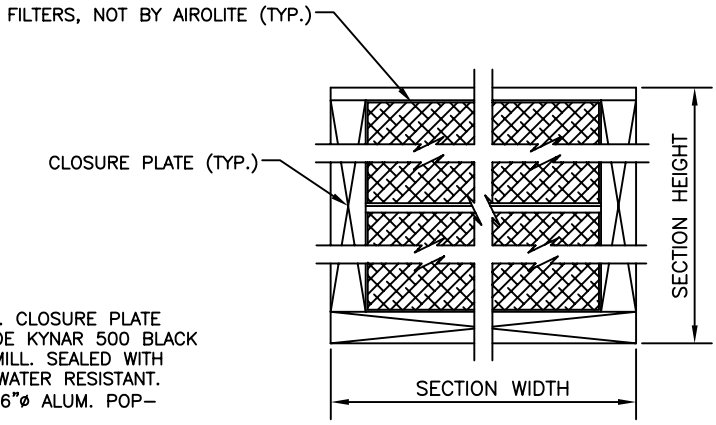

INTERIOR ELEVATION
NO SCALE
(TYPICAL FOR EACH ITEM)

NOTE: SEE AIR FILTER SIZE SCHEDULE FOR MANUFACTURER'S STANDARD FILTER SIZES (FORM NO. 623055).

AIROLITE®
THE AIROLITE COMPANY P.O. BOX 666 MARIETTA, OH U.S.A. 45750-0666
TELEPHONE: (614) 373-7676 FAX: (614) 373-6666 AMCA MEMBER

AIR FILTER & FRAME DETAILS
ORDER NO.
SHEET OF

2-99

FORM NO. 623052 © Copyright 1999 The Airolite Company